DAIDO

B1 TYPE

BUCKET STRAINERS

Bucket strainers are mainly installed in horizontal piping. Since the bucket strainer elements housed in the bodies can be taken out from the tops, the debris caught by the elements can be taken outside easily. The design of bucket strainers can be arranged to suit larger piping.

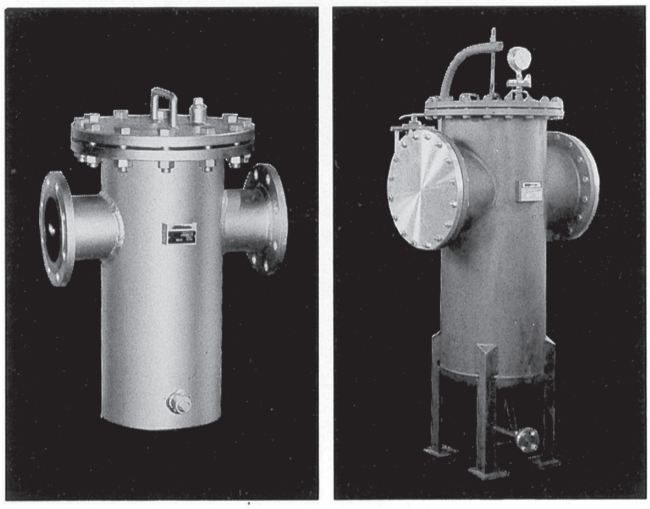

CONN.SIZE 1"～12"

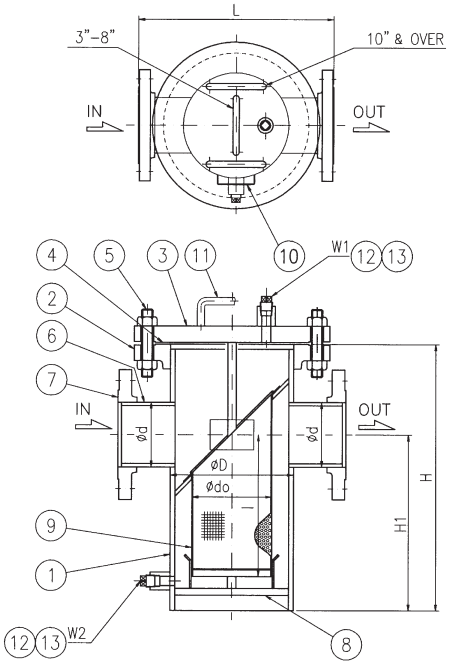

CONN.SIZE OVER14"

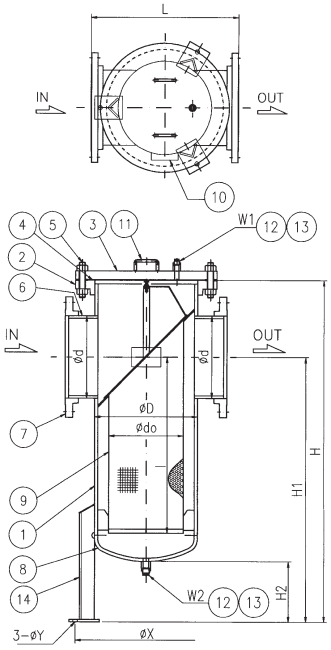

NO.	NAME
1	Body pipe
2	Body flange
3	Cover flange
4	Gasket
5	Bolt / nut
6	Line pipe
7	Line flange
8	Bottom plate
9	Element
10	Name plate
11	Handle
12	Drain / vent boss
13	Drain / vent plug
14	Leg

DIMENSION

unit:mm

CONN.SIZE		L		D	H	H1	ELEMENT		VENT/DRAIN		WEIGHT(kg)	
φd		150Lb	300Lb				φd0	ℓ	W1	W2	150Lb	300Lb
25A	1″	180	260	3″	260	160	40	120	3/8″	3/8″	13	19
32	1¼″	200	260	3″	265	160	40	120	3/8″	3/8″	13	20
40	1½″	260	340	4″	295	175	70	130	3/8″	½″	25	38
50	2″	260	340	4″	295	175	70	130	3/8″	½″	26	39
65	2½″	330	390	5″	350	220	90	170	½″	½″	37	56
80	3″	340	430	6″	400	260	110	200	½″	½″	47	72
100	4″	400	500	8″	470	310	140	250	½″	½″	76	119
125	5″	480	580	10″	550	370	190	305	½″	¾″	118	183
150	6″	500	600	10″	620	430	190	365	½″	¾″	126	196
200	8″	560	680	12″	770	540	240	465	½″	¾″	198	299
250	10″	610	760	14″	860	590	270	500	½″	1″	262	409
300	12″	700	840	16″	970	650	300	550	½″	1″	372	547

DIMENSION

unit:mm

CONN.SIZE		L		D	H	H1	H2	ELEMENT		VENT / DRAIN	L E G			WEIGHT (kg)
φd		150Lb	300Lb					φd0	ℓ	W1/W2	φX	φY	BOLT SIZE	
350A	14″	750	900	18″	1550	1200	300	330	750	1″	650	23	M20	524
400A	16″	800	980	20″	1690	1310	300	370	870	1″	710	23	M20	661
450A	18″	900	1050	22″	1870	1450	300	420	1000	1″	740	23	M20	843
500A	20″	1000	1100	24″	2060	1610	300	460	1150	1″	820	27	M24	1067

B1-3TYPE

LARGE SIZE BUCKET STRAINERS

Bucket B1-3 type strainers are designed for high-flow applications or where the lower heights of strainers are required as the maintenance spaces are not too.

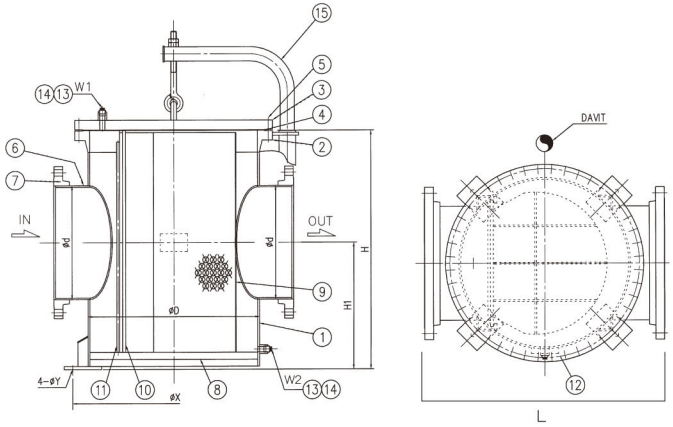

DIMENSION

unit:mm

CONN.SIZE		L	D (O.D.)	H	H1	VENT/DRIN		L E G			WEIGHT(kg) 150Lb
ød						W_1	W_2	øX	øY	BOLTSIZE	
450A	18″	1160	32″	1000	550	1″	1″	930	ø23	M20	986
500A	20″	1240	34″	1140	620	1″	1″	1030	ø23	M20	1228
550A	22″	1280	36″	1140	620	1″	1″	1080	ø23	M20	1372
600A	24″	1280	38″	1280	680	1″	1″	1080	ø23	M20	1462
650A/700A	26″, 28″	1500	40″	1650	1000	1″	1″	1240	ø26	M22	1839/1880
750A/800A	30″, 32″	1800	48″	1850	1100	1″	1″	1460	ø26	M22	2806/2847

NO.	NAME	NO.	NAME
1	Body pipe	9	Element
2	Body flange	10	Guide-1
3	Cover flange	11	Guide-2
4	Gasket	12	Name plate
5	Bolt / nut	13	Drain / vent boss
6	Line pipe	14	Drain / vent plug
7	Line flange	15	Davit
8	Bottom plate		